Notes:

1. Assembly should be performed by knowledgeable and skilled individual. SuperDroid Robots offers assembly services if you are not comfortable reading schematics and performing work.
2. Wire gauges depend on load and size of motors.
3. Fuse size depends on load and size of motors.
4. Switch should be rated for at least the same amount of current as the fuse.

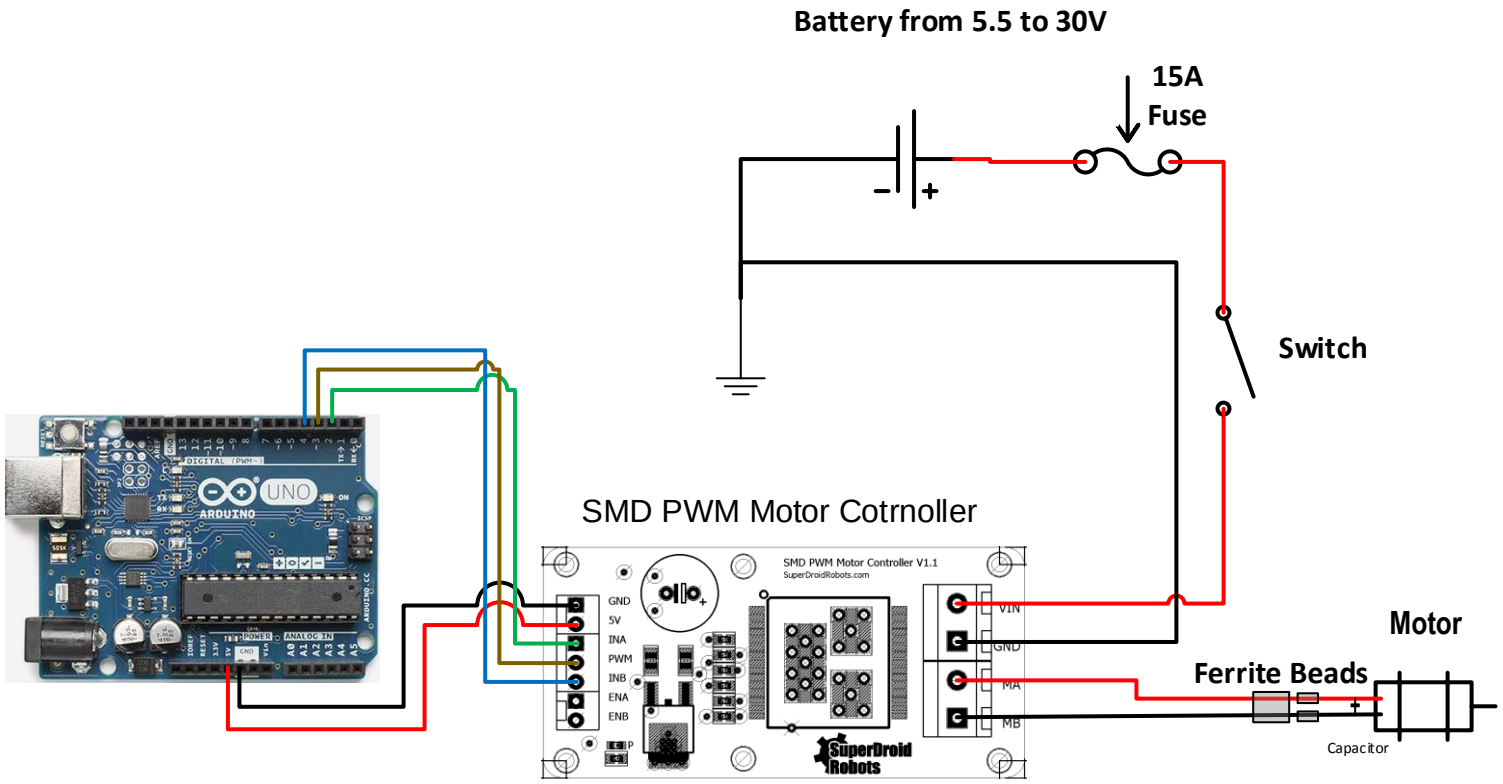

Power The arduino with the 5V motor controller output

SuperDroid Robots	SuperDroid Robots Inc	
	Wiring Diagram on How to connect a SMD PWM Motor controller	2/24/2017
		PAGE 1 OF 1